ORTAL
YOUR LIFE. YOUR FIRE

75 TS
Stand Alone

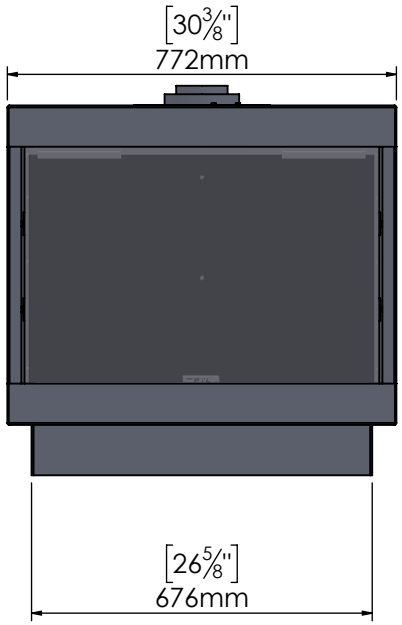

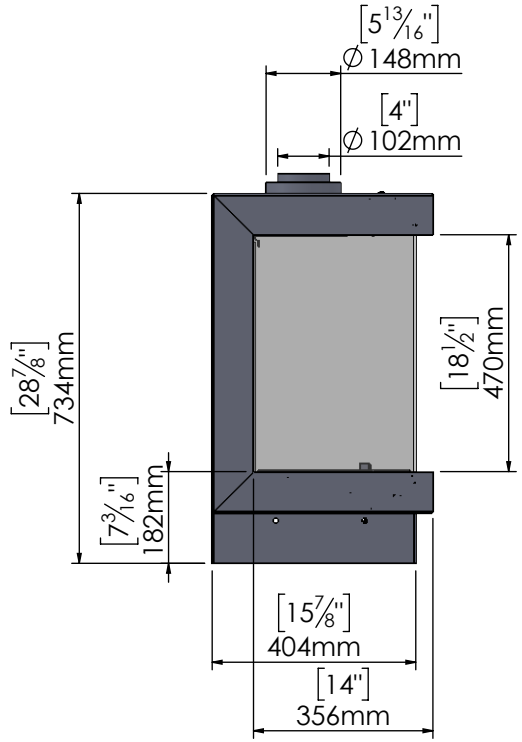

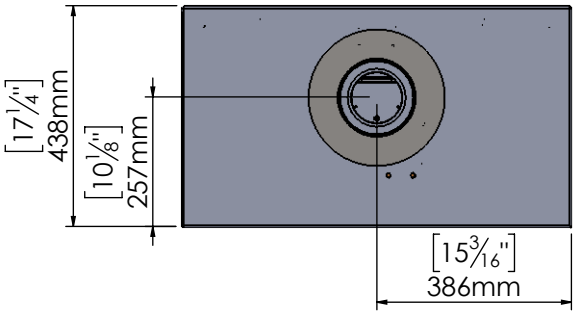

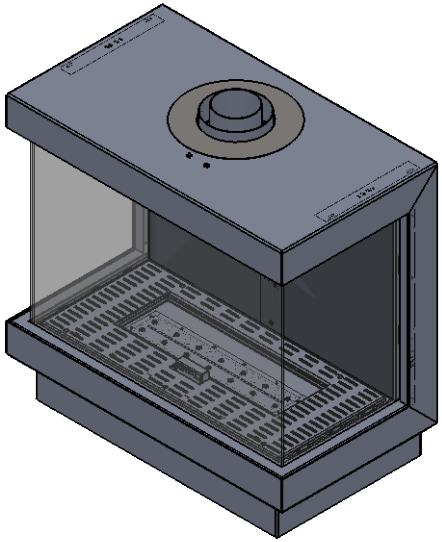

12/8/2020