ORTAL
YOUR LIFE. YOUR FIRE

170H RS

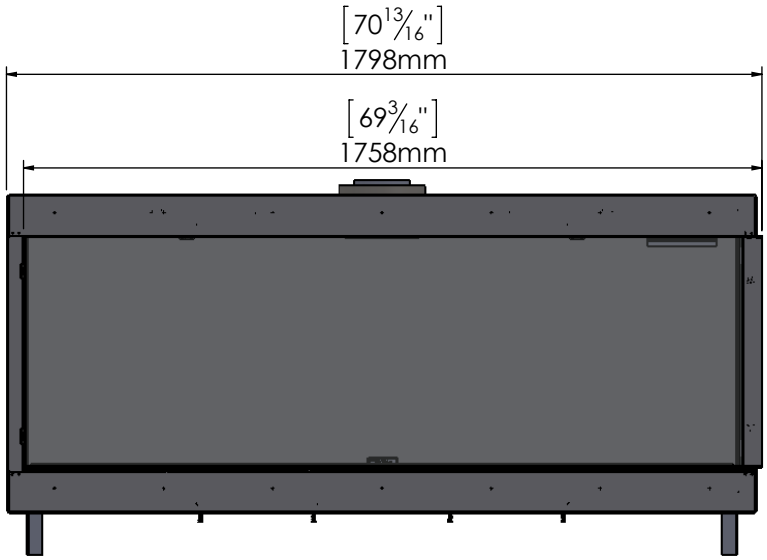

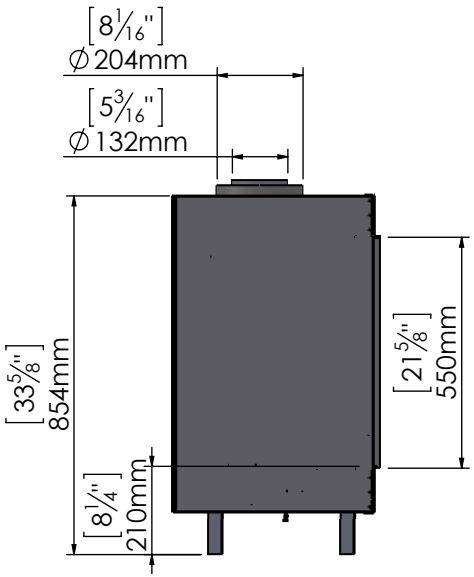

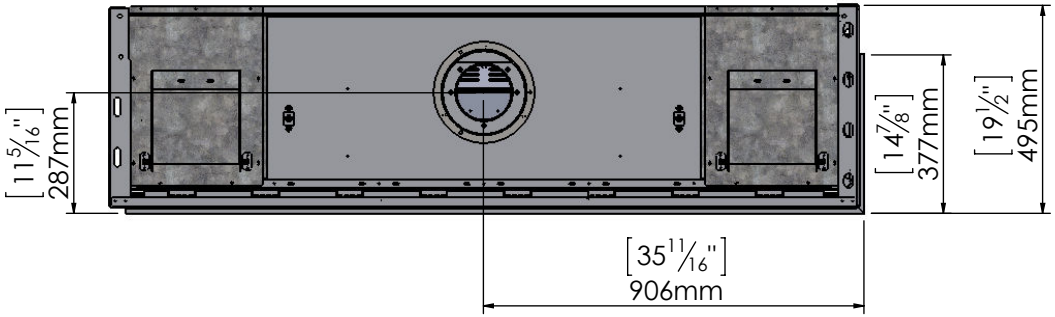

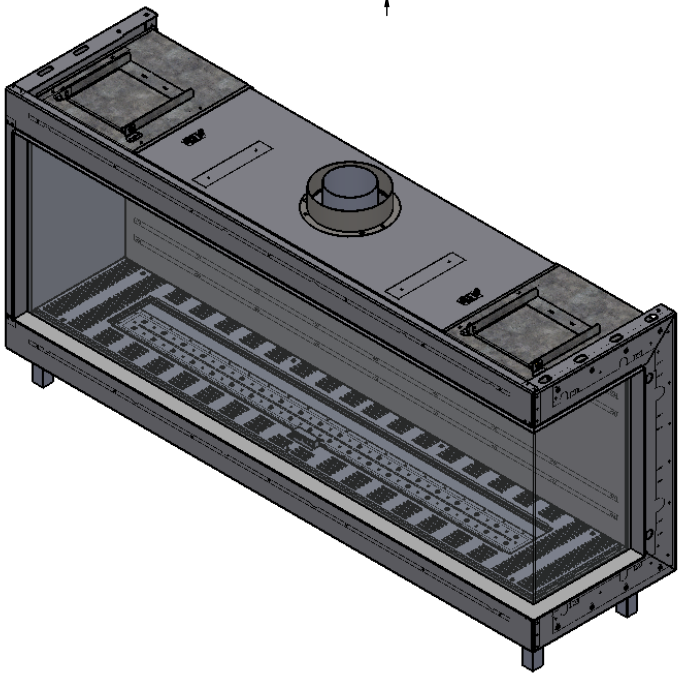

11/22/2018