ORTAL
YOUR LIFE. YOUR FIRE

250H TS

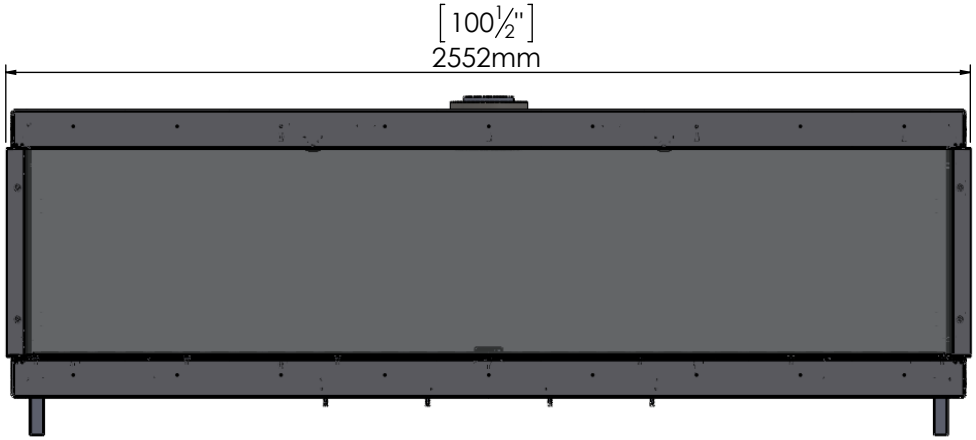

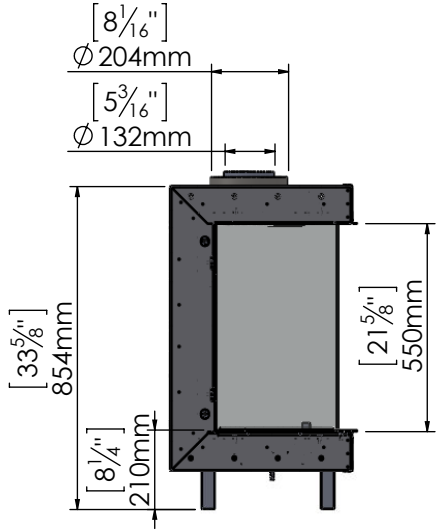

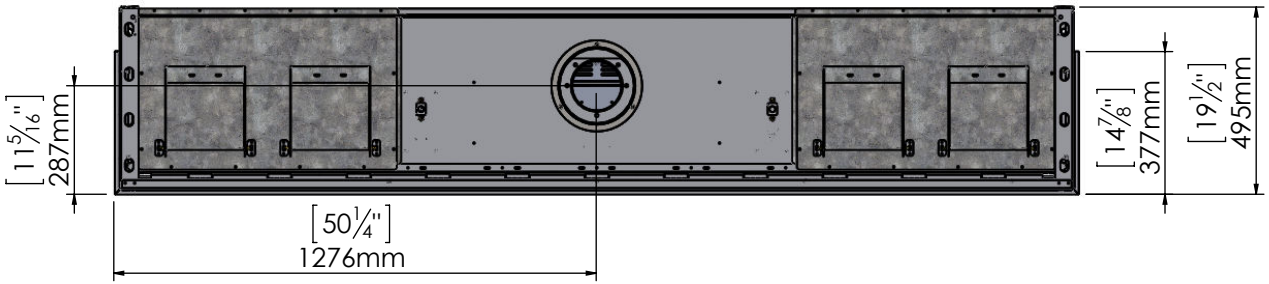

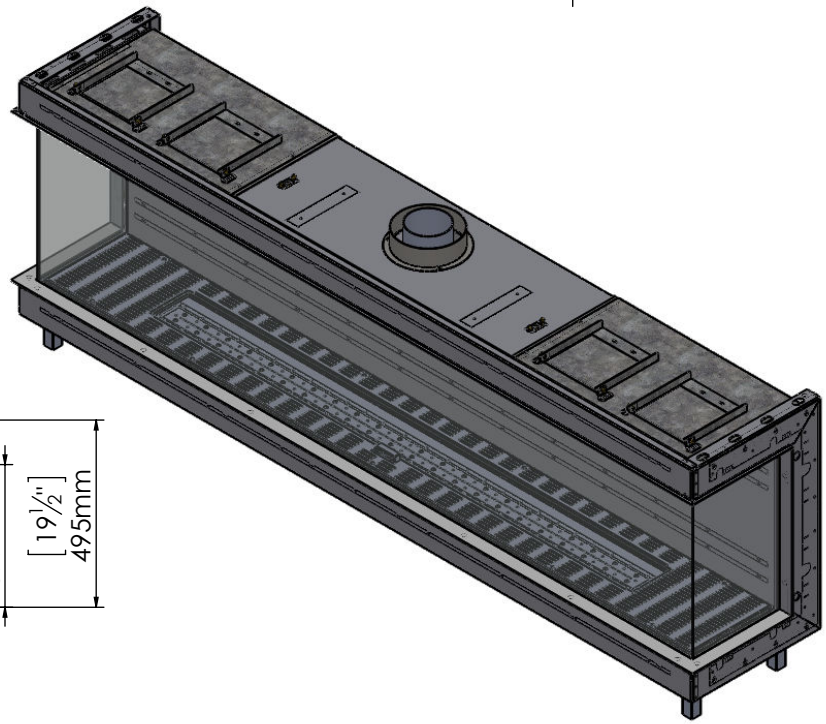

11/21/2018