ORTAL
YOUR LIFE. YOUR FIRE

90 RSN

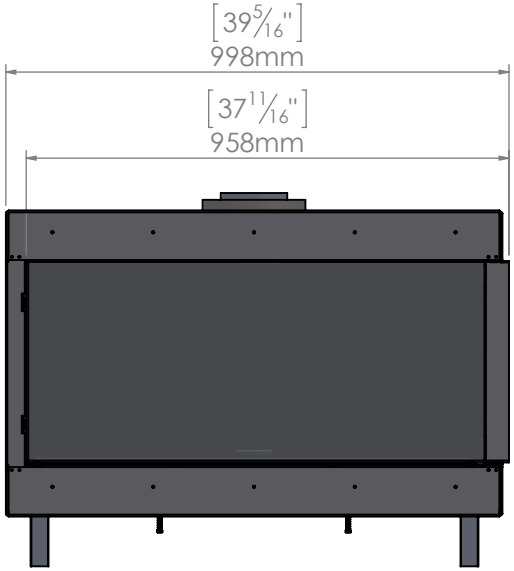

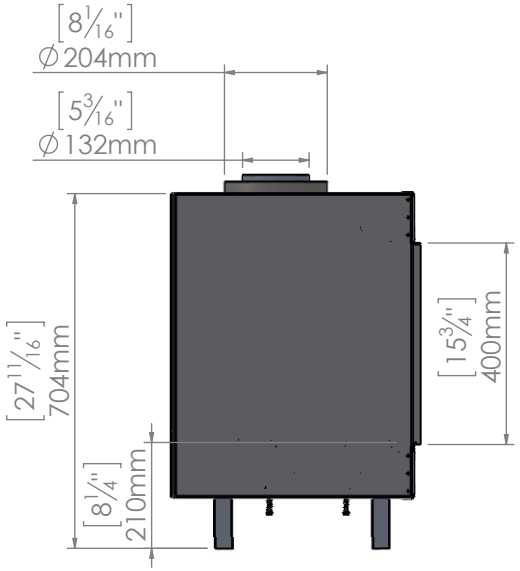

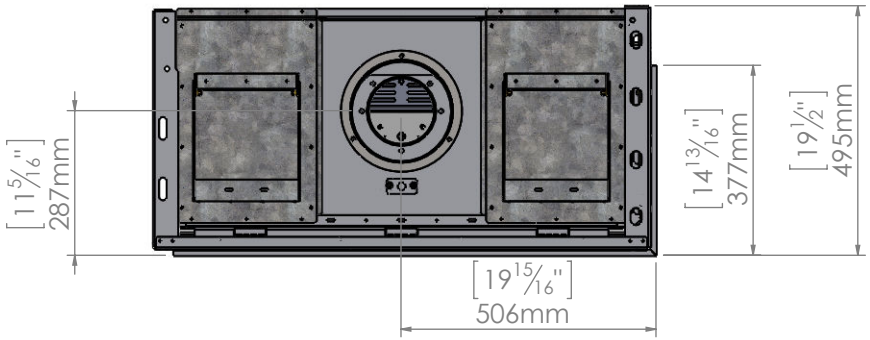

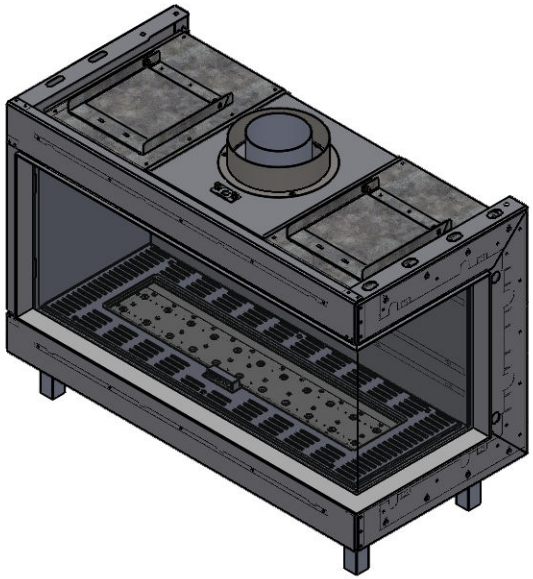

11/12/2018