ORTAL
YOUR LIFE. YOUR FIRE

Wilderness 150 RS

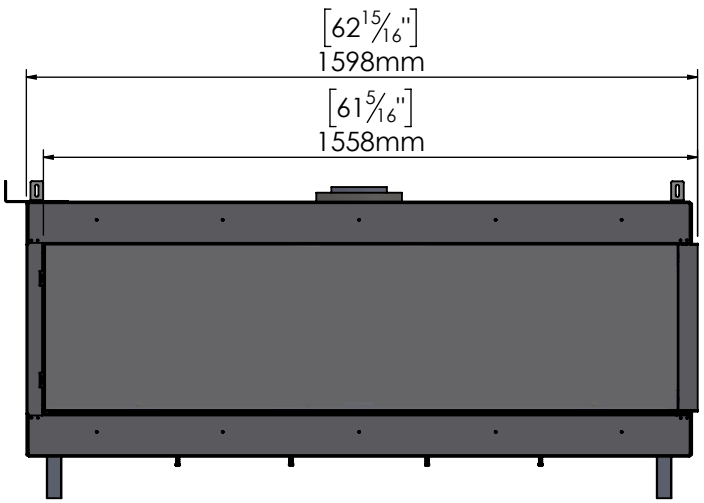

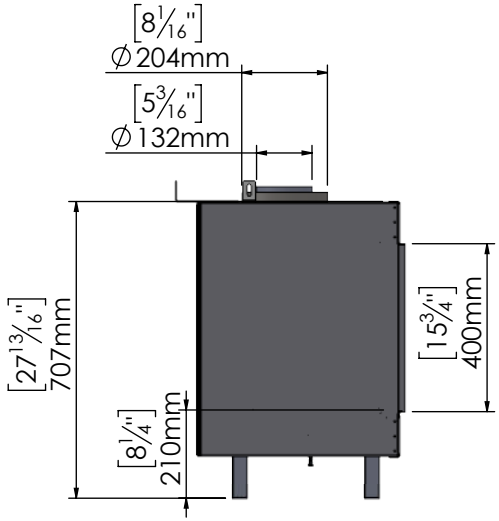

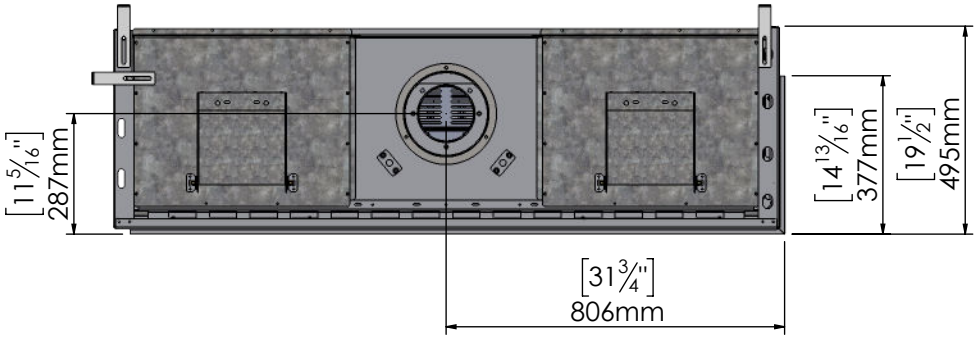

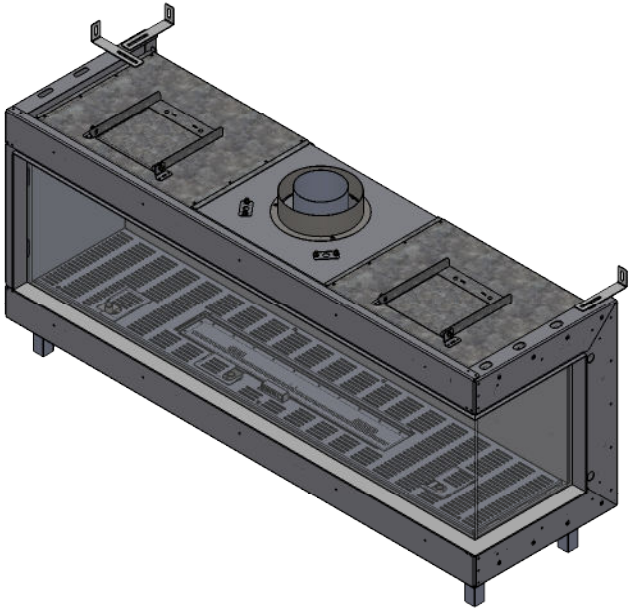

3/30/2022